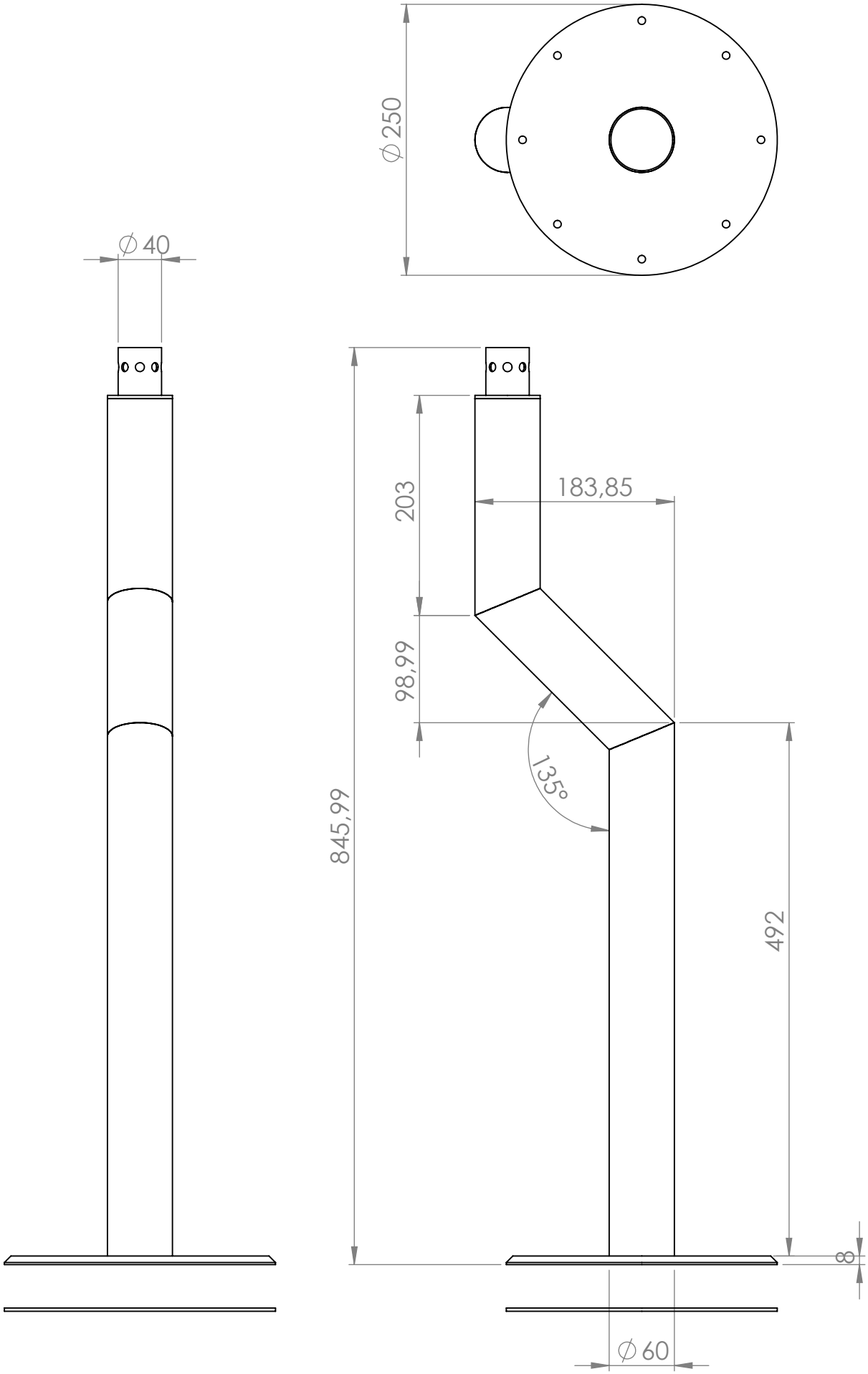

www.revolutionfishingequipment.com