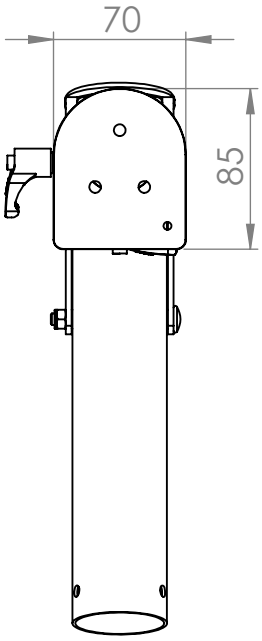

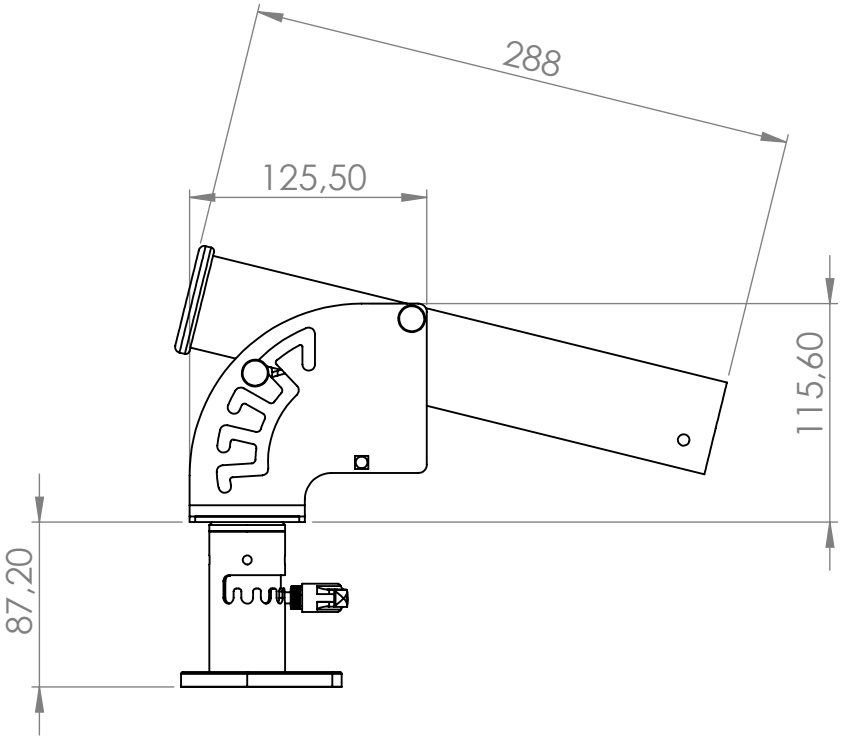

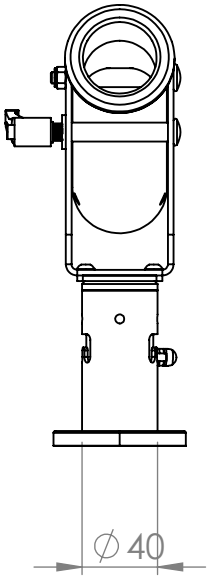

www.revolutionfishingequipment.com